Electric Wiring diagram for KSIB Klimaire DC-Inverter units

INDOOR

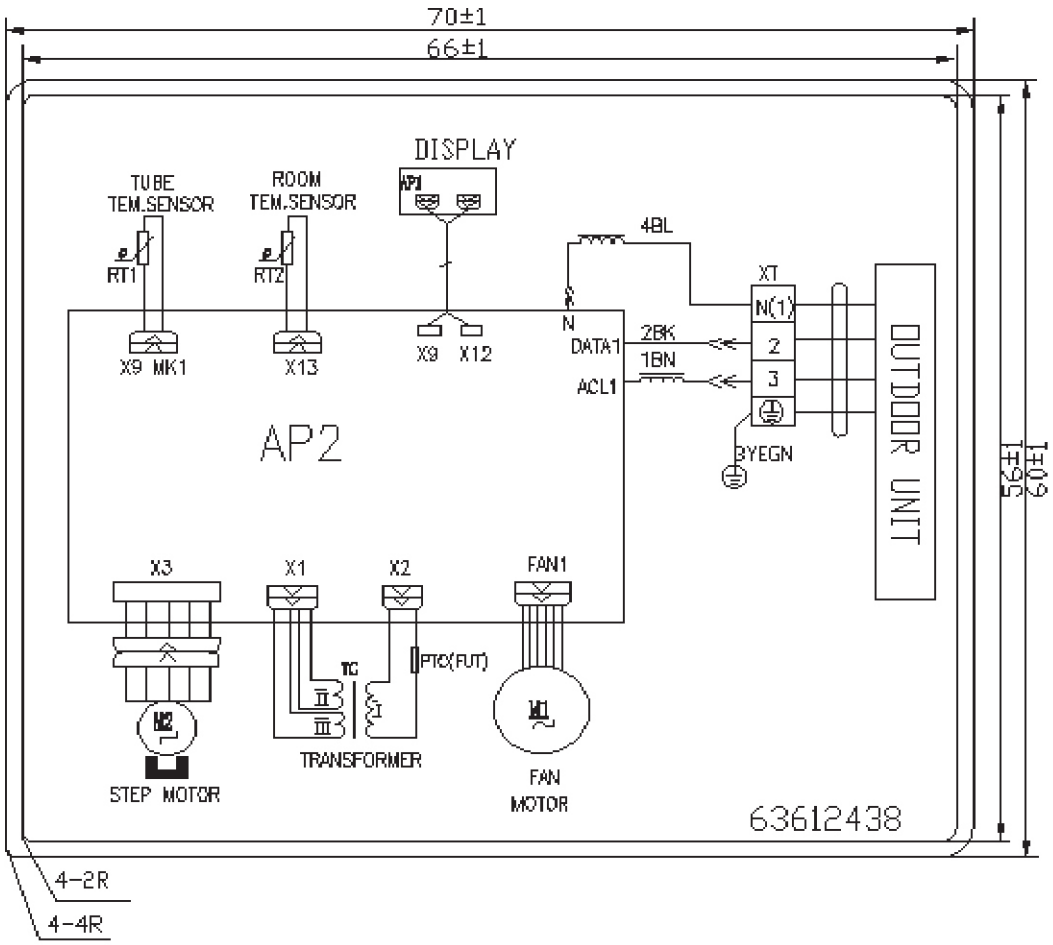
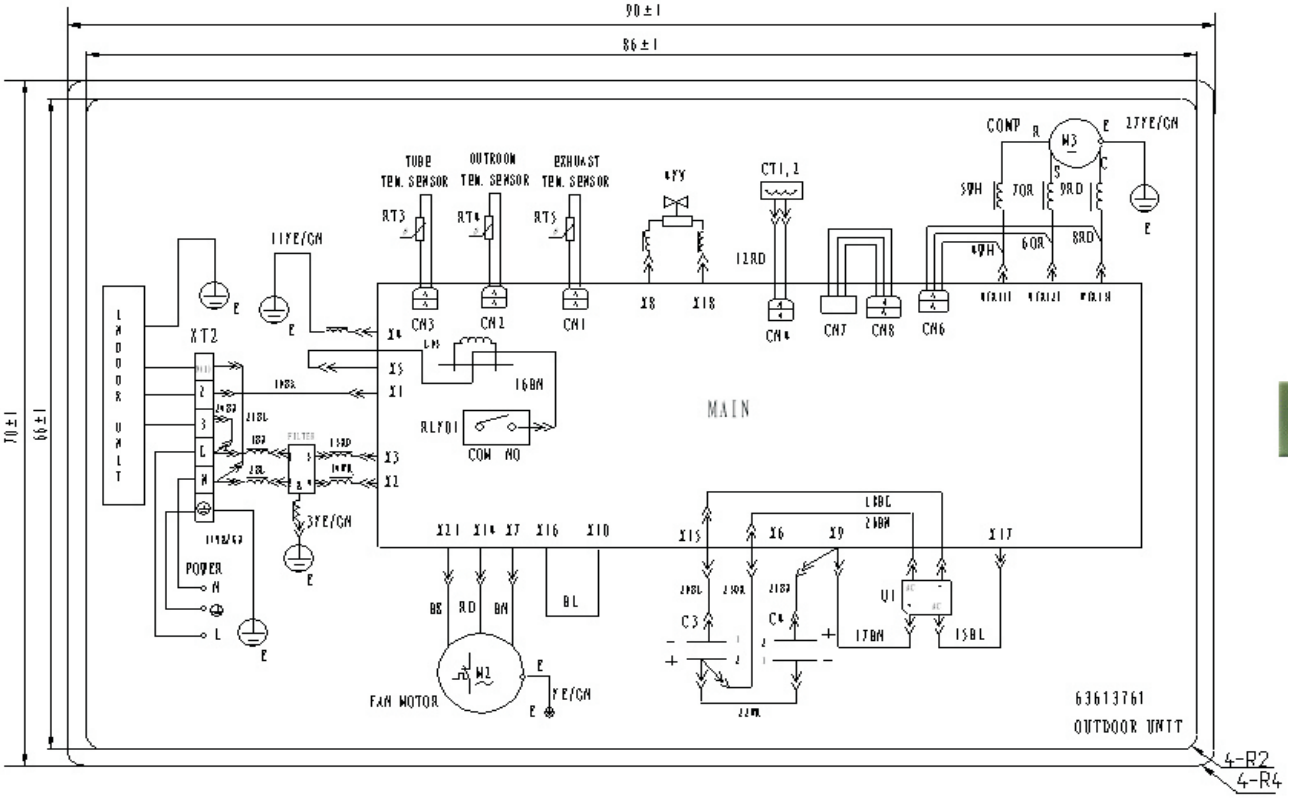
OUTDOOR